MEM Deck-mounted basin spout with pop-up waste - Brushed Champagne (22kt Gold)

13 715 782 Product version from 7/1/2021

- 200mm projection
- fixed spout
- rectangular, air-enriched flow
- height of mixer 321 mm
- height up to aerator 190 mm
- hole diameter 35 mm
- 2x screw-in M 10 x 1 pressure hose, leak-tested
- rosette 60 x 60 mm
- max. flow 5.7 l/min
- lead-free
- This product can help a building meet the requirements of Green Building Rating Systems, e.g. LEED®, BREEAM®, DGNB

Only suitable for basins with an overflow.

Brushed Champagne (22kt Gold)	13 715 782-46
Chrome	13 715 782-00
Brushed Platinum	13 715 782-06
Platinum	13 715 782-08
Dark Chrome	13 715 782-19
Brushed Durabrass (23kt Gold)	13 715 782-28
Champagne (22kt Gold)	13 715 782-47
Brushed Dark Platinum	13 715 782-99

We reserve the right to change designs, product range and technical specifications without prior notice.
More information can be found at: www.dornbracht.com +49 (0) 2371 8899 900 mail@dornbracht.com

MEM Deck-mounted basin spout with pop-up waste - Brushed Champagne (22kt Gold)

13 715 782 Product version from 7/1/2021

mm [inches]

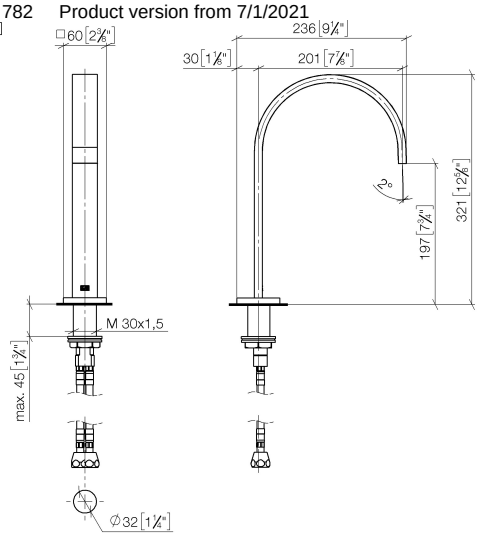

Flow rate chart

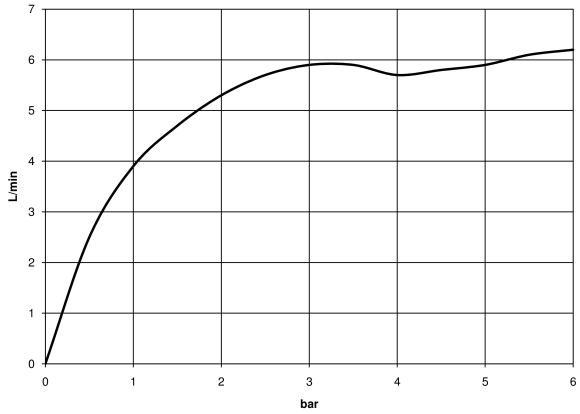

Codes & Standards

Executive Order
no. 1007

Certificates

GDV_0400

MEM Deck-mounted basin spout with pop-up waste - Brushed Champagne (22kt Gold)

13 715 782 Product version from 7/1/2021

Parts for other finishes can be found here: Chrome

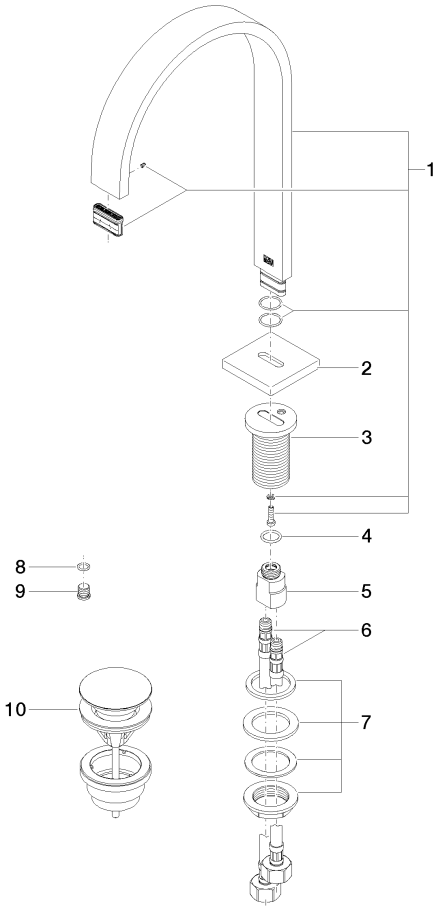

Spare parts list

No.	Item Number	Name	Quantity used	Delivery time
1	90 28 22 155 01-46	spout	1	30
2	09 27 78 034-46	rosette	1	30
3	09 11 10 054 10 90	connection	1	2
4	09 14 10 130 90	seal	1	2
5	09 11 10 055 10 90	connection	1	2
6	04 30 04 019 00 90	hose	2	2
7	04 23 10 009 01 90	fixing set	1	2
8	90 14 10 060 00 90	seal	1	2
9	09 31 20 065 90	plug	1	2
10	10 125 970-46	Basin Waste with push fastening 1 1/4" - Brushed Champagne (22kt Gold)	1	30

We reserve the right to change designs, product range and technical specifications without prior notice.
More information can be found at: www.dornbracht.com +49 (0) 2371 8899 900 mail@dornbracht.com